SCHEDULE OF R.C.C. BEAMS

BEAM MKD.	SIZE	AT SUPPORT	AT MID SPAN	STIRRUPS SUPPORT/SPAN
B1	0.250X0.400	TOP:2-16TST. 1-16TEXT. BOT:2-16TST.	TOP:2-16TST. BOT:2-16TST. 1-16TEXT.	8 T @ 200MM C/C
B2	0.250X0.450	TOP:2-16TST. 2-16TEXT. BOT:2-16TST.	TOP:2-16TST. BOT:2-16TST. 2-16TEXT.	8 T @ 150MM C/C
B3	0.250X0.450	TOP:2-20TST. 2-20TEXT. BOT:2-16TST.	TOP:2-20TST. BOT:2-16TST. 2-20TEXT.	8 T @ 150MM C/C
B4	0.250X0.500	TOP:4-16TST. BOT:2-16TST.	TOP: 4-16TST. BOT:2-16TST.	8 T @ 110MM C/C
B5	0.250X0.500	TOP:2-16TST. 2-16TEXT. BOT:2-16TST.	TOP:2-16TST. BOT:2-16TST. 2-16TEXT.	8 T @ 150MM C/C
B6	0.250X0.500	TOP:2-20TST. 2-20TEXT. BOT:2-16TST.	TOP: 2-20TST. BOT: 2-16TST. 2-16TEXT.	8 T @ 150MM C/C
B7	0.250X0.500	TOP:2-25TST. 2-20TEXT. BOT:2-20TST.	TOP: 2-25TST. BOT:2-20TST. 1-16TEXT.	8 T @ 150MM C/C
B8	0.500X0.125	TOP:3-16TST. +2-12T BOT:3-16TST. +2-12T	TOP:3-16TST. +2-12T BOT:3-16TST. +2-12T	8 T @ 150MM C/C
TB	0.250X0.450	TOP:2-16TST. 2-12TEXT. BOT:2-16TST.	TOP:2-16TST. BOT:2-16TST. 2-12TEXT.	8 T @ 150MM C/C
TB1	0.250X0.450	TOP:4-16TST. BOT:2-16TST.	TOP:4-16TST. BOT:2-16TST.	8 T @ 110MM C/C

SCHEDULE OF FOUNDATION

UNDER COLUMN MKD.	FDN MKD.	SIZE (M.) A B	"D" OVER ALL (M.)	REINFORCEMENT SHORTER DIRN.	REINFORCEMENT LONGER DIRN.
C3,C4,C12,C22,C24	F1	1.900X1.900	0.275	(a) 12 T @ 150MM C/C	(b) 12 T @ 150MM C/C
C1,C2,C5,C7,C20,C23, C25	F2	2.050X2.050	0.275	(a) 12 T @ 150MM C/C	12 T @ 150MM C/C(b)
C21,C28	F3	2.250X2.250	0.300	(a) 12 T @ 135MM C/C	12 T @ 135MM C/C(b)
C6,C10,C11,C13,C17	F4	2.350X2.350	0.300	(a) 12 T @ 135MM C/C	(b) 12 T @ 135MM C/C
C14	F5	2.450X2.450	0.300	12 T @ 135MM C/C(a)	12 T @ 135MM C/C(b)
C18,C19	F6	2.700X2.700	0.325	12 T @ 125MM C/C(a)	12 T @ 125MM C/C(b)
C8-C9-C15-C16-LIFT	F7	5.100X5.350	0.400	12 T @ 125MM C/C(a) T&B	12 T @ 125MM C/C(b) T&B
C26-C27	F8	2.200X4.500	0.300	12 T @ 135MM C/C(a)	12 T @ 175MM C/C(b)

COLUMN SCHEDULE

COLUMN MKD.	REINFORCEMENT	TIES
C1,C2,C3,C5,C13,C20,C22, C23,C24,C25	M N 0.250X0.450 6-16T +2-12T	8T@175MMC/C (4L)
C6,C7,C12,C26	M N 0.250X0.450 6-16T +2-20T	8T@200MMC/C (4L)
C27,C28	M N 0.250X0.450 6-20T +4-16T	8T@200MMC/C (4L)
C19	M N 0.250X0.450 12-20T	8T@200MMC/C (4L)
C8,C9,C10,C14,C17,C21	M N 0.250X0.500 6-16T +2-12T	8T@175MMC/C (4L)
C11,C15,C16,C18	M N 0.250X0.500 6-16T +2-20T	8T@200MMC/C (4L)

SCHEDULE OF R.C.C. RIB BEAMS

BEAM MKD.	SIZE	AT SUPPORT	AT MID SPAN	STIRRUPS SUPPORT/SPAN
RB1	0.500X 0.550	TOP:2-16 T ST. +2-20 T ST. BOT:2-16 T ST. +2-20 T ST.	TOP:2-16 T ST. +2-20 T ST. BOT:2-16 T ST. +2-20 T ST.	10 T @ 125MM C/C

SCHEDULE OF SLAB

PANEL MKD.	THICKNESS	SHORTER DIRECTION		LONGER DIRECTION	
	M	SUPPORT	SPAN	SUPPORT	SPAN
S1	0.110	8T@150MMC/C	8T@150MMC/C	8T@175MMC/C	8T@175MMC/C
S2	0.125	8T@125MMC/C	8T@125MMC/C	8T@150MMC/C	8T@150MMC/C
STAIR	0.125	8T@150MMC/C	8T@150MMC/C	8T@200MMC/C	8T@200MMC/C

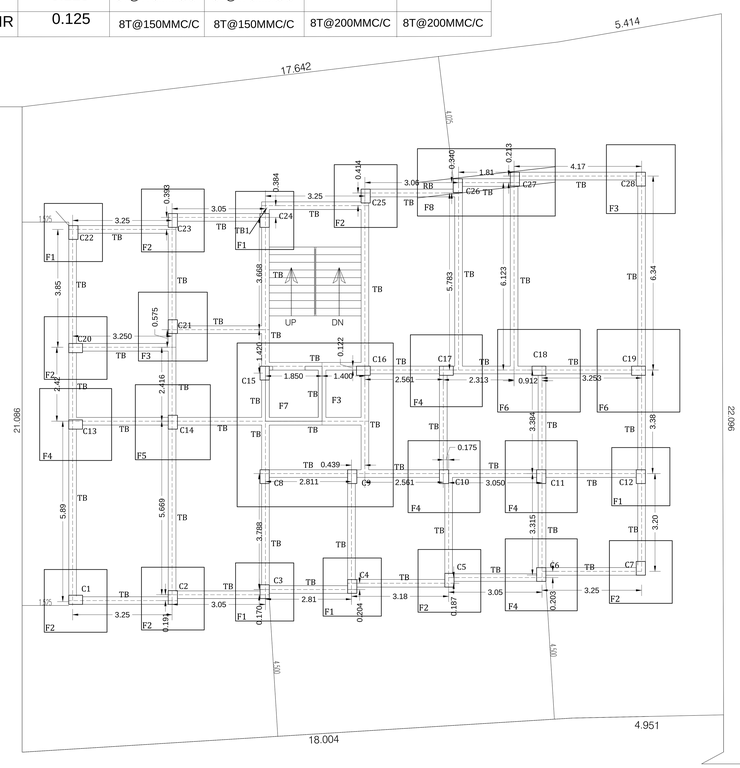

FOUNDATION AND TIE BEAM LAYOUT PLAN
SCALE:- 1:1

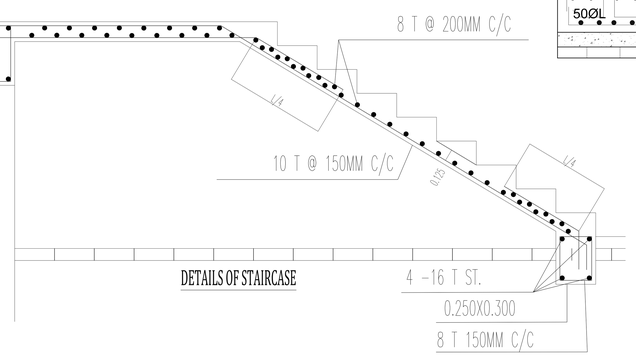

DETAILS OF STAIRCASE

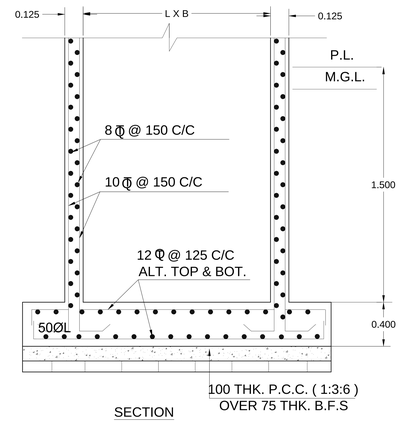

SECTION

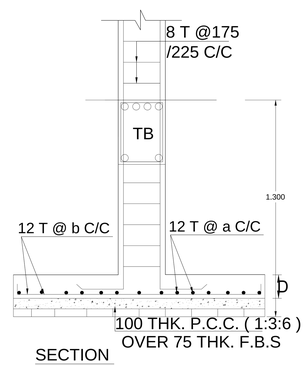

SECTION

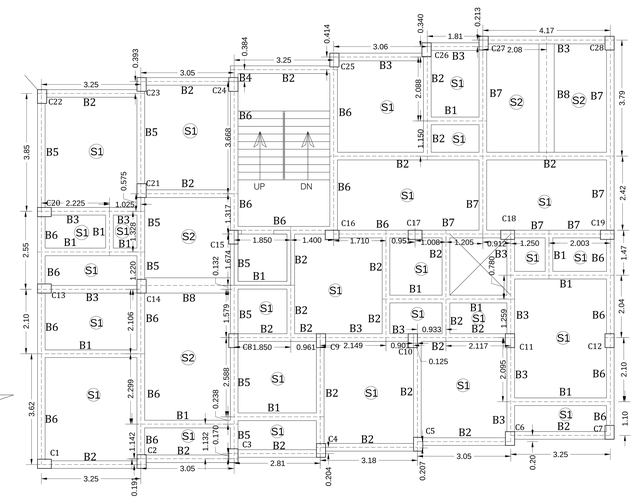

TYPICAL FLOOR (GROUND ,1ST, 2ND,3RD, 4TH)
BEAM LAYOUT PLAN
SCALE -1:1

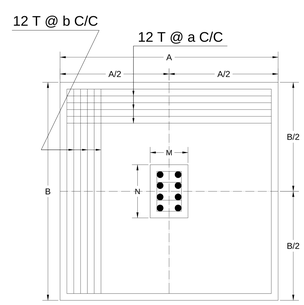

DETAIL OF FOUNDATION PLAN

PROJECT NAME :-

STRUCTURAL PLAN OF THE PROPOSED FIVE (G+4) STORIED RESIDENTIAL APARTMENT OF, OWNER:-1.) SRI. SANDIPAN BHOWMICK, S/O SRI. NIRMAL CHANDRA BHOWMICK, 2.) SMT. SOMA BHOWMICK, W/O SRI SANDIPAN BHOWMICK , OVER,C.S PLOT NO:735(P),R.S. PLOT NO:735 ,L.R. PLOT NO.-347, L.R KHATIAN NO-6145, 5733 & 5555 J.L. NO - 66 ,OF MOUZA - DHANDABAG, P.S.-DURGAPUR, DIST. -PASCHIM BARDHAMAN

SPECIFICATIONS

1. DEPTH OF FOUNDATION IS AT 1.300 M. BELOW EX. G.L.
2. SAFE BEARING CAPACITY OF SOIL IS AS PER SOIL TEST REPORT.
3. GRADE OF CONC. IS M-20 AND GRADE OF STEEL IS Fe-550.
4. CLEAR COVER TO MAIN REIN. IS AS PER BELOW :-
   a). FOUNDATION - 75 MM. b). COLUMN - 40 MM.
   c). BEAM - 25 MM. d). SLAB - 15 MM.
5. ALL SLABS MUST BE CAST MONOLYTHIC WITH SUPPORTING BEAM.
6. ALL OTHER SPECIFICATIONS ARE AS PER NATIONAL BUILDING CODE OF INDIA.

SIGNATURE OF OWNERS

CERTIFICATE OF ARCHITECT / L.B.S. :-
CERTIFIED ON THE PLAN ITSELF WITH FULL RESPONSIBILITY THAT THE BUILDING PLAN HAS DRAWN UP AS PER PROVISION OF K.M.C. BUILDING RULES 2009, AS AMMENDED FROM TIME TO TIME AND THE SITE CONDITION INCLUDING THE ABUTTING ROAD IS CONFORM WITH THE PLAN. IT IS A BUILDABLE SITE NOT A TANK OR FILLED UP TANK. THERE IS AN EXISTING STRUCTURE TO BE DEMOLISHED BEFORE COMMENCEMENT OF WORK. IT IS FULLY OCCUPIED BY THE OWNER. THERE IS NO TENANT.

SIGNATURE OF L.B.S

CERTIFICATE OF STRUCTURAL ENGINEER :-
THE STRUCTURAL DESIGN & DRAWING OF BOTH FOUNDATION AND SUPERSTRUCTURE OF THE BUILDING HAVE BEEN MADE BY ME CONSIDERING ALL POSSIBLE LOADS INCLUDING THE SEISMIC LOAD AS PER N.B.C OF INDIA AND BASIS OF SOIL INVESTIGATION REPORT . IT IS CERTIFIED THAT IT IS SAFE AND STABLE IN ALL RESPECT.

[SUVANKAR CHAUDHURI
AMC/075 //ESE/I/215

SIGNATURE OF E.S.E

SCALE 1 : 1
(UNLESS OTHERWISE MENTIONED)

ALL DIMENSIONS ARE IN M.
(UNLESS OTHERWISE MENTIONED)

E S W N